INNOVATIVE
CLOSET DESIGNS
445 West Main Street, Suite 7
Wyckoff, NJ 07481
201-848-6355 / 201-322-3721 Fax
customerservice@icdnj.com www.icdnj.com

Estimate

Date	Estimate #
10/7/2025	24226

All material is guaranteed to be as specified. All work to be completed in a workmanlike manner according to standard practices. All agreements contingent upon strikes, accidents or delays beyond our control. Owner to carry fire, tornado and other necessary insurance. Our workers are fully covered by Workman's Compensation Insurance.

Authorized Signature _____ William B. Smith III

Name / Address

Montana Contracting
173 N Route 9W
Congers, NY 10920
845-664-2375 Ines 845-398-1778 O
ines@montanacontracting.com

Note: Pricing Is Valid for 30 Days From Date Of Estimate.

Existing Closet Material Must Be Removed Prior To Installation.

Please review all the information on this estimate. NON Returnable/NON Refundable Once Ordered. Lead-time on most orders as listed below from FINAL FIELD measurements - followed by signature and deposit if applicable.

5. M

TERMS	SALESPERSON	PROJECT	TAX STATUS
Net 30 Days	Don	S.OrangetownAmbulanceCorp/70Independence	ST124

ITEM	DESCRIPTION	QTY/SF/LF...	PRICE	TOTAL
	South Orangetown Ambulance Corp. 70 Independence Avenue Tappan, NY 10983			
Lockers	Lockers - Supply & Install (20PC) 1 Tier Traditional Locker 18X15X 72, No Base, Slope Hood / Powder Coated Standard Finish TBD / Door Ventilation: Louvers for (20) Lockers / Door Latching: Multipoint for (20) Lockers / Exposed End Panels / Hat Shelves	1	14,338.43	14,338.43T
	Shelving - ALL BLOCK 10/07/2025 -Excercise Room #1			
PricingForL...	14" Deep Laminate Shelving - White / Chrome on All Hardware - Installed			301.75T
	-Excercise Room #2			
PricingForL...	14" Deep Laminate Shelving - White / Chrome on All Hardware - Installed			301.75T
	Bath Accessories - Confirm Locations Women's & Men's Restroom			
Bobrick	Bobrick Stainless Steel Recessed Dual Roll Toilet Tissue Dispenser B-697 *RO 11 3/4" W x 5 1/4" H x 3 3/8" Deep - Hole Must be Cut Out & Framed Out by Others Prior to Installation. See Spec Sheet.	1	248.00	248.00T
Bobrick	Bobrick Stainless Steel Classic Series Recessed Sanitary Napkin Disposal & Toilet Tissue Dispenser B-3094 *RO 15 5/8" W x 11 1/4" H x 4" Deep - Hole Must be Cut Out & Framed Out by Others Prior to Installation. See Spec Sheet.	1	802.07	802.07T
Bobrick	Bobrick Stainless Steel Classic Series Recessed Convertible Paper Towel Dispenser & Waste Receptacle B-3944 *RO 16" W x 54 3/4" H x 4" Deep - Hole Must be Cut Out & Framed Out by Others Prior to Installation. See Spec Sheet. -(5PC) 24" Towel Bars To be Determined	2	835.46	1,670.92T

TOTAL

By providing credit card information, the 50% deposit charge and final balance charge following installation are authorized. Prepay terms are paid in full.

DATE:_____ SIGNATURE:_____

☐☐☐☐ - ☐☐☐☐ - ☐☐☐☐ - ☐☐☐☐

Exp. Date ____/____ CVV ____

Address credit card bill is mailed to: _____

INNOVATIVE
CLOSET DESIGNS
445 West Main Street, Suite 7
Wyckoff, NJ 07481
201-848-6355 / 201-322-3721 Fax
customerservice@icdnj.com www.icdnj.com

Estimate

Date	Estimate #
10/7/2025	24226

All material is guaranteed to be as specified. All work to be completed in a workmanlike manner according to standard practices. All agreements contingent upon strikes, accidents or delays beyond our control. Owner to carry fire, tornado and other necessary insurance. Our workers are fully covered by Workman's Compensation Insurance.

Authorized Signature _____ William B. Smith III

Name / Address

Montana Contracting
173 N Route 9W
Congers, NY 10920
845-664-2375 Ines 845-398-1778 O
ines@montanacontracting.com

Note: Pricing Is Valid for 30 Days From Date Of Estimate.

Existing Closet Material Must Be Removed Prior To Installation.

Please review all the information on this estimate. NON Returnable/NON Refundable Once Ordered. Lead-time on most orders as listed below from FINAL FIELD measurements - followed by signature and deposit if applicable.

5. M

TERMS	SALESPERSON	PROJECT	TAX STATUS
Net 30 Days	Don	S.OrangetownAmbulanceCorp/70Independence	ST124

ITEM	DESCRIPTION	QTY/SF/LF...	PRICE	TOTAL
	1/4" Clear Mirror with Polished Edges - No Track, Glued, Centered on Backsplash - BLOCK 10/07/2025			
Mirror	Women's Restroom 72 x 42 / EACH PC	1	315.78	315.78T
Mirror	Men's Restroom 66 x 42 / EACH PC	1	300.74	300.74T
	Shower Doors - BLOCK 10/07/2025			
	Bathroom 1			
L1627-30-3...	Century Framed Lucette Door & Panel Shower Enclosure 34 - 35 x 71 1/4 Chrome/Clear	1	840.40	840.40T
	Bathroom 2			
L1627-30-3...	Century Framed Lucette Door & Panel Shower Enclosure 34 - 35 x 71 1/4 Chrome/Clear	1	840.40	840.40T
	Bathroom 3			
L1627-30-3...	Century Framed Lucette Door & Panel Shower Enclosure 34 - 35 x 71 1/4 Chrome/Clear	1	840.40	840.40T
	Bathroom 4			
L1627-30-3...	Century Framed Lucette Door & Panel Shower Enclosure 34 - 35 x 71 1/4 Chrome/Clear	1	840.40	840.40T
All	ALL PRICES ARE SUBJECT TO FINAL FIELD MEASUREMENTS.			0.00
Bldr/Home...	NOTE: If this estimate is going to a builder except the homeowner is signing off and/or paying ICD directly - the estimate must then be revised into the homeowner's name with the new payment terms of 50% deposit/balance COD.		0.00	0.00T

TOTAL

By providing credit card information, the 50% deposit charge and final balance charge following installation are authorized. Prepay terms are paid in full.

DATE:_____ SIGNATURE:_____

☐☐☐☐ - ☐☐☐☐ - ☐☐☐☐ - ☐☐☐☐

Exp. Date ____/____ CVV ____

Address credit card bill is mailed to: _____

INNOVATIVE
CLOSET DESIGNS
445 West Main Street, Suite 7
Wyckoff, NJ 07481
201-848-6355 / 201-322-3721 Fax
customerservice@icdnj.com www.icdnj.com

Estimate

Date	Estimate #
10/7/2025	24226

All material is guaranteed to be as specified. All work to be completed in a workmanlike manner according to standard practices. All agreements contingent upon strikes, accidents or delays beyond our control. Owner to carry fire, tornado and other necessary insurance. Our workers are fully covered by Workman's Compensation Insurance.

Authorized Signature _____ William B. Smith III

Name / Address

Montana Contracting
173 N Route 9W
Congers, NY 10920
845-664-2375 Ines 845-398-1778 O
ines@montanacontracting.com

Note: Pricing Is Valid for 30 Days From Date Of Estimate.

Existing Closet Material Must Be Removed Prior To Installation.

Please review all the information on this estimate. NON Returnable/NON Refundable Once Ordered. Lead-time on most orders as listed below from FINAL FIELD measurements - followed by signature and deposit if applicable.

5. M

TERMS	SALESPERSON	PROJECT	TAX STATUS
Net 30 Days	Don	S.OrangetownAmbulanceCorp/70Independence	ST124

ITEM	DESCRIPTION	QTY/SF/LF...	PRICE	TOTAL
Filler Strips	NOTE: All sizes are BLOCK. After completion of walls, if they are not plumb or if the base is not level (by 3/8" or more), there will be an additional charge for a tapered filler strip(s).			0.00T
Custom	CUSTOM ORDER - 4 - 5 Week Lead Time from Final Measurements - NON Returnable / NON Refundable - No cancellations and/or changes once order has been processed.		0.00	0.00T
Custom La...	LAMINATE CUSTOM ORDER - 4 - 6 Week Lead Time On Standard Laminate (No Doors/Drawers/Crown) / 8 - 10 Week Lead Time on UPGRADED Laminate from Final Measurements - NON Returnable / NON Refundable - No cancellations and/or changes once order has been processed. If changes are submitted after the initial approval, lead times may be extended.		0.00	0.00T
Sketches	Note: All drawings are an artistic interpretation of the general appearance of the design. It is not meant to be an exact rendering.		0.00	0.00T
	ST-124 (NY Capital Improvement Exempt)		0.00%	0.00

TOTAL $21,641.04

ACCEPTANCE OF ESTIMATE-The above prices, specifications and conditions are satisfactory and are hereby accepted. You are authorized to do the work as specified. Payment will be made as outlined.
METHOD OF PAYMENT: ( ) Check ( ) Credit Card

DATE:_____ SIGNATURE:_____

By providing credit card information, the 50% deposit charge and final balance charge following installation are authorized. Prepay terms are paid in full.

☐☐☐☐ - ☐☐☐☐ - ☐☐☐☐ - ☐☐☐☐

Exp. Date ____/____ CVV ____

Address credit card bill is mailed to: _____

BOBRICK

Technical Data

ClassicSeries® RECESSED CONVERTIBLE PAPER TOWEL DISPENSER AND WASTE RECEPTACLE

B-3944

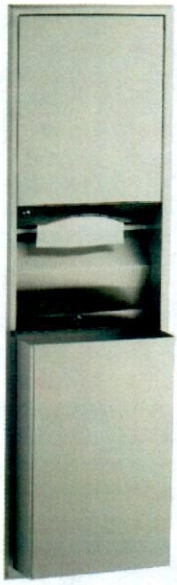

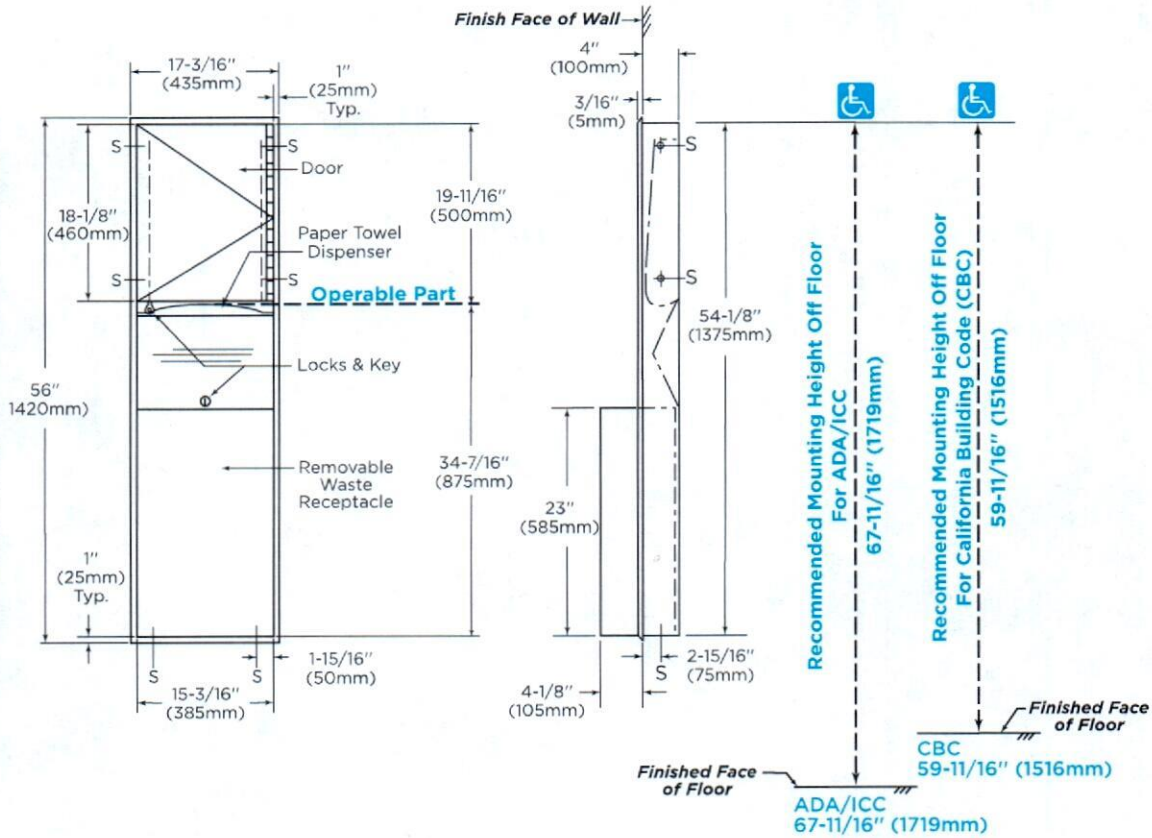

Rough Wall Opening

16" (405mm) wide

54-3/4" (1390mm) high

4" (100mm) minimum recessed depth

ADA/CBC Installation Guidance

***Operable Part:** Top of paper towel dispenser opening

Maximum mounting height of Operable Part:

ADA/ICC: 48" above finished floor (AFF)
CBC: 40" above finished floor (AFF)

*For more information regarding operable parts, please refer to Bobrick Planning Guide for Accessible Restrooms, page 9.

MATERIALS:

Cabinet — 18-8, Type-304, heavy-gauge stainless steel. Welded construction. Exposed surfaces have satin-finish.

Flange — 18-8, Type-304, 22-gauge (0.8mm) stainless steel with satin-finish. Drawn and beveled, one-piece, seamless construction.

Door — 18-8, Type-304, 22-gauge (0.8mm) stainless steel with satin-finish. Double-pan-back construction. Secured to cabinet with a full-length stainless steel piano-hinge. Equipped with a semi-concealed tumbler lock keyed like other Bobrick washroom accessories.

Paper Towel Dispenser — 18-8, Type-304, 22-gauge (0.8mm) stainless steel with satin-finish. Rounded towel tray has hemmed opening to dispense paper towels without tearing. Capacity: 600 C-fold or 800 multifold paper towels.

continued . . .

The illustrations and descriptions herein are applicable to production as of the date of this Technical Data Sheet.
The manufacturer reserves the right to, and does from time to time, make changes and improvements in designs and dimensions.

Revised 9/17/24
© 2024 by Bobrick Washroom Equipment, Inc.

Waste Receptacle — 18-8 S, Type-304, 22-gauge (0.8mm) stainless steel with satin-finish. Front and sides of bottom and all top edges are hemmed for safe handling. Secured to cabinet with a tumbler lock keyed like other Bobrick washroom accessories. Capacity: 12-gal. (45.5-L).

Accessory: To accommodate disposable trash liners, order Bobrick Model No. 3944-134 LinerMate®, sold as an optional accessory item. LinerMate eliminates unsightly trash liner overhang and facilitates installation and removal of disposable trash liners in the 12-gallon waste receptacle.

NOTE: To accommodate disposable trash liners, order LinerMate®, sold as an optional accessory item. LinerMate eliminates unsightly trash liner overhang and facilitates installation and removal of disposable trash liners in the 12-gallon waste receptacle.

TowelMate® available as an optional accessory allows paper towels to dispense one at time without bulging or sagging, or falling through the towel tray opening. The 90 degree return on the towel guide prevents papers from falling forward and out when door is opened for servicing. TowelMate fits Gamco and most other manufacturers' similar models.

OPERATION:

Paper towel dispenser accommodates C-fold or multifold paper towels without adjustment or use of adapters. To adapt to changing needs of washrooms, this unit is field convertible with the Universal, Touch-Free Roll Towel Dispenser or Universal, Automatic Roll Towel Dispenser. To order convertible modules, reference part numbers below under Options.

To empty waste receptacle, unlock with key provided.

Options:

- Universal Touch-Free Roll Towel Dispenser Module convertible in field: order Bobrick Part No. 3961-50.
- Automatic, Universal Roll Towel Dispenser Module convertible in field: order Bobrick Part No. 3974-350.
- 18-gallon Waste Receptacle: order Bobrick Part No. 368-60.
- Reusable Vinyl Liner: order Bobrick Part No. 368-16.
- LinerMate for 12-gal waste only: order Bobrick Part No. 3944-134.
- TowelMate accessory: order Bobrick Part No. 3944-130.

INSTALLATION:

Provide framed rough wall opening 16" wide x 54-3/4" high (405 x 1390mm). Minimum recessed depth required to finish face of wall is 4" (100mm). Allow clearance for construction features that may protrude into rough wall opening from opposite wall. Coordinate with mechanical engineer to avoid pipes, vents, and conduits. If unit projects above top of wainscot, provide aluminum channel or other filler to eliminate gap between flange and finish face of wall. Mount unit in wall opening with shims between framing and cabinet at all points indicated by an S, then secure unit with #8 x 1-1/4" (4.2 x 32mm) sheet-metal screws (not furnished).

SPECIFICATION:

Recessed convertible paper towel dispenser and waste receptacle shall be Type-304 stainless steel with welded construction; exposed surfaces shall have satin finish. Flange shall be drawn and beveled, one-piece, seamless construction. Door shall be secured to cabinet with a full-length stainless steel piano-hinge and equipped with a semi-concealed tumbler lock keyed like other Bobrick washroom accessories. Paper towel dispenser shall dispense 600 C-fold or 800 multifold paper towels. Removable waste receptacle shall be secured to cabinet with a tumbler lock, have front and side edges of bottom and all top edges hemmed for safe handling, and shall have a minimum capacity of 12-gal. (45.5-L).

Recessed Convertible Paper Towel Dispenser And Waste Receptacle shall be Model B-3944 of Bobrick Washroom Equipment, Inc., Clifton Park, New York; Jackson, Tennessee; Los Angeles, California; Bobrick Washroom Equipment Company, Scarborough, Ontario; Bobrick Washroom Equipment Pty. Ltd., Australia; and Bobrick Washroom Equipment Limited, United Kingdom.

The illustrations and descriptions herein are applicable to production as of the date of this Technical Data Sheet.
The manufacturer reserves the right to, and does from time to time, make changes and improvements in designs and dimensions.

© 2024 by Bobrick Washroom Equipment, Inc.

BOBRICK

Technical Data

ClassicSeries® Recessed Sanitary Napkin Disposal and Toilet Tissue Dispenser

B-3094

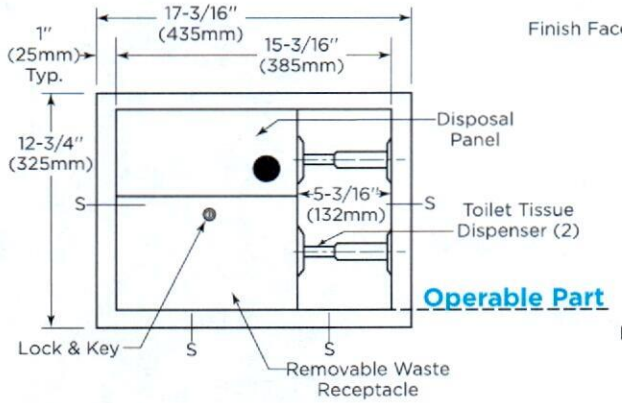

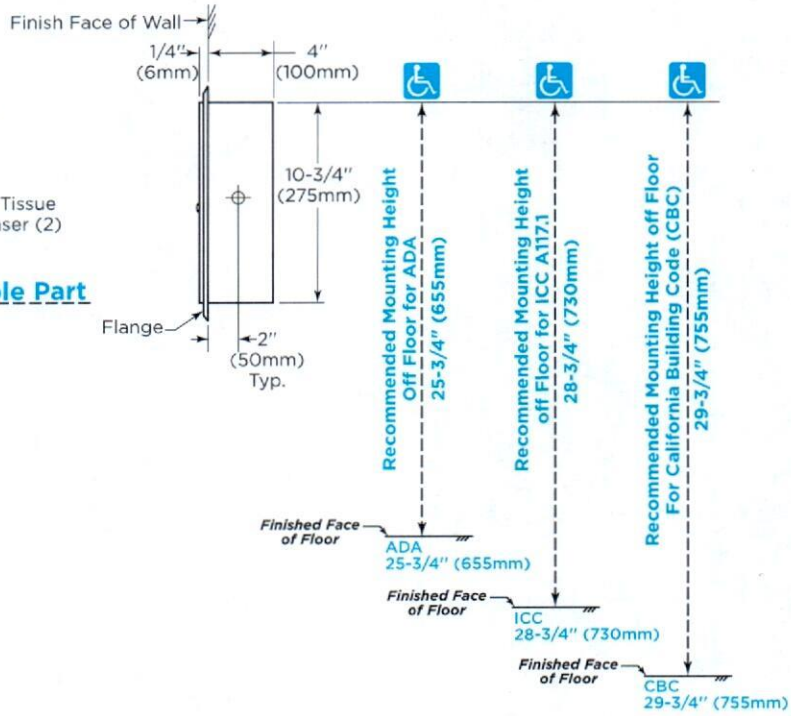

Rough Wall Opening
15-5/8" (395mm) wide
11-1/4" (285mm) high
4" (100mm) minimum recessed depth

ADA/ICC/CBC Installation Guidance

***Operable Part:** Bottom of outlet of toilet tissue dispenser

Minimum mounting height of Operable Part:
ADA: 15" (380mm) above finished floor (AFF)
ICC: 18" (457mm) above finished floor (AFF)
CBC: 19" (482mm) above finished floor (AFF)

*For more information regarding operable parts, please refer to Bobrick Planning Guide for Accessible Restrooms, page 9.

continued . . .

The illustrations and descriptions herein are applicable to production as of the date of this Technical Data Sheet.
The manufacturer reserves the right to, and does from time to time, make changes and improvements in designs and dimensions.

Revised 8/4/25
© 2025 by Bobrick Washroom Equipment, Inc.

MATERIALS:

Cabinet — 18-8, type-304, heavy-gauge stainless steel. All-welded construction.

Flange — 18-8, type-304, 22-gauge (0.8mm) stainless steel with satin finish. Drawn and beveled, one-piece, seamless construction.

Disposal Panel — 18-8, type-304, 22-gauge (0.8mm) stainless steel with satin finish. Self-closing panel is secured to cabinet with a spring-loaded, full-length stainless steel piano-hinge and equipped with an international graphic symbol identifying napkin disposal.

Waste Receptacle — 18-8, type-304, 22-gauge (0.8mm) stainless steel with satin finish. Equipped with a tumbler lock keyed like other Bobrick washroom accessories. Capacity: 0.8-gal. (3.1-L).

Toilet Tissue Dispensers (2) — 18-8, type-304, 22-gauge (0.8mm) stainless steel with satin finish. Equipped with two chrome-plated plastic spindles, each with a heavy-duty internal spring.

OPERATION:

Unit holds two standard-core toilet tissue rolls up to 5-1/4" (135mm) diameter (1800 sheets). Receptacle unlocks with key provided and slides out for servicing.

Designer's Note: It is recommended that one full toilet tissue roll remain wrapped until the other roll has been depleted to avoid wasting ends of both rolls.

INSTALLATION:

Provide framed rough wall opening 15-5/8" wide x 11-1/4" high (395 x 285mm). Minimum recessed depth required from finish face of wall is 4" (100mm). Allow clearance for construction features that may protrude into rough wall opening from opposite wall. Coordinate with mechanical engineer to avoid pipes, vents, and conduits. Mount cabinet with shims between framing and cabinet at all points indicated by an S, then secure unit with sheet-metal screws furnished by manufacturer.

SPECIFICATION:

Recessed sanitary napkin disposal and toilet tissue dispenser shall be type-304 stainless steel with all-welded construction; exposed surfaces shall have satin finish. Flange shall be drawn and beveled, one-piece, seamless construction. Self-closing disposal panel shall be secured to cabinet with a spring-loaded, full-length stainless steel piano-hinge and equipped with an international graphic symbol identifying napkin disposal. Removable waste receptacle shall be equipped with a tumbler lock keyed like other Bobrick washroom accessories and shall have a minimum capacity of 0.8-gal. (3.1-L). Unit shall be equipped with two chrome-plated plastic toilet tissue spindles that hold standard-core rolls up to 5-1/4" (135mm) diameter (1800 sheets).

To specify theft-resistant spindles as an optional accessory, add to specification: Theft-resistant toilet tissue spindles shall be removable only with special key provided.

Recessed Sanitary Napkin Disposal And Toilet Tissue Dispenser shall be Model B-3094 of Bobrick Washroom Equipment, Inc., Clifton Park, New York; Jackson, Tennessee; Los Angeles, California; Bobrick Washroom Equipment Company, Scarborough, Ontario; Bobrick Washroom Equipment Pty. Ltd., Australia; and Bobrick Washroom Equipment Limited, United Kingdom.

The illustrations and descriptions herein are applicable to production as of the date of this Technical Data Sheet.
The manufacturer reserves the right to, and does from time to time, make changes and improvements in designs and dimensions.

© 2025 by Bobrick Washroom Equipment, Inc.

BOBRICK

Technical Data

RECESSED DUAL-ROLL TOILET TISSUE DISPENSER

(FOR STUD WALLS OR COUNTERTOP APRONS)

B-697
B-6977

Specify Model Required:
- ☐ Model B-697 Bright polished stainless steel
- ☐ Model B-6977 Satin-finish stainless steel

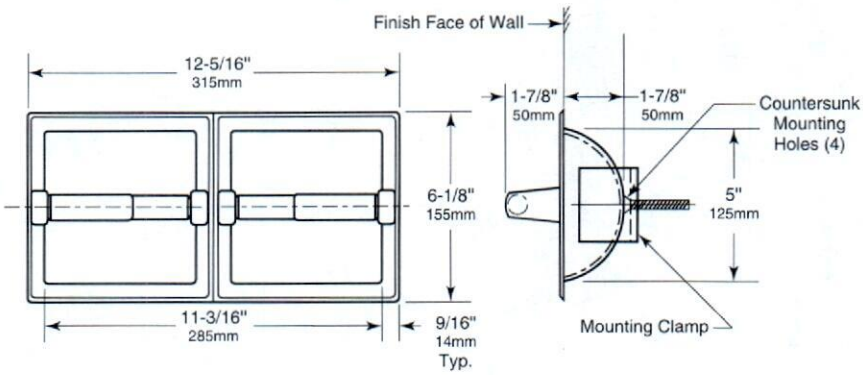

Rough Opening
11-3/4" (300mm) wide
5-1/4" (135mm) high
3-3/8" (85mm) minimum recessed depth

MATERIALS:

Shell and Flange — 18-8, Type-304, 22-gauge (0.8mm) stainless steel. Drawn, one-piece, seamless construction with four countersunk mounting holes.

Support Posts (4) — Heavy-duty cast zamak with chrome-plated finish.

Mounting Bracket — Plated-steel mounting clamp attaches to back of unit with four sheet-metal screws for installation in stud walls or countertop aprons.

Spindles (2) — Chrome-plated plastic equipped with heavy-duty internal springs.

Designer's Note: Theft-resistant toilet tissue spindles, which are removable only with special key provided, are available as an optional accessory - part no. 283-604.

INSTALLATION:

Provide framed rough opening 11-3/4" wide x 5-1/4" high (300 x 135mm). Minimum recessed depth required from finish face of wall or apron is 3-3/8" (85mm).

For installation in stud walls or countertop aprons without backing, loosely attach mounting clamp to back of unit with sheet-metal mounting screws. Insert into rough opening. Adjust mounting clamp so it grips surface inside rough opening. Secure in place by tightening four sheet-metal mounting screws.

For installation in stud walls or countertop aprons with backing, discard mounting clamp furnished with unit. Insert unit only into rough opening and secure with sheet-metal screws furnished. Backing must comply with local building codes.

SPECIFICATION:

Recessed dual-roll toilet tissue dispenser shall be Type-304, 22-gauge (0.8mm) stainless steel with _____ (insert one: bright polished or satin) finish. Shell and flange shall be drawn, one-piece, seamless construction. Unit shall be furnished with plated-steel mounting clamp for stud walls and countertop aprons. *Spindles shall be chrome-plated plastic with heavy-duty internal springs.

**To specify theft-resistant spindles as an optional accessory, add to specification:* Theft-resistant toilet tissue spindles shall be removable only with special key provided.

Recessed Dual-Roll Toilet Tissue Dispenser shall be Model _____ (insert model number) of Bobrick Washroom Equipment, Inc., Clifton Park, New York; Jackson, Tennessee; Los Angeles, California; Bobrick Washroom Equipment Company, Scarborough, Ontario; Bobrick Washroom Equipment Pty. Ltd., Australia; and Bobrick Washroom Equipment Limited, United Kingdom.

The illustrations and descriptions herein are applicable to production as of the date of this Technical Data Sheet.
The manufacturer reserves the right to, and does from time to time, make changes and improvements in designs and dimensions.

Revised 8/10/18 Printed in U.S.A.
© 2018 by Bobrick Washroom Equipment, Inc.